MCB 115 Programmable I/O Option Module Instructions

TR200

BAS-SVX34A-EN

May 2009

BAS-SVX34A-EN

Introduction

MCB115 Programmable I/O Option Card is supposed to be used e.g. in the following cases:

- As a general extension of the I/O selection available on the Control Card, e.g. for multi zone control with three pressure transmitters.
- Turning the drive into a decentralized I/O block supporting Building Automation System with inputs and outputs.
- Support the Extended PI controllers with I/Os for setpoint inputs, transmitter/sensor inputs and outputs for actuators.
- Digital output used for either driving a relay, input to commonly used PLC I/O card or as input to another drive in a sequential controlled application.

In/Outputs

This option has programmable inputs/outputs which extends the number of inputs and outputs available for the drive.
This option has three analog inputs which can work as voltage 0-10V or 2-10V, current 0-20 mA or 4-20 mA, temperature input for PT1000 or NI1000 sensors.
This option has three outputs which can work as voltage 0-10V or 2-10V, current 0-20 mA or 4-20 mA or digital output.

The analog inputs can be used for reference or process feedback for all the PID controllers.

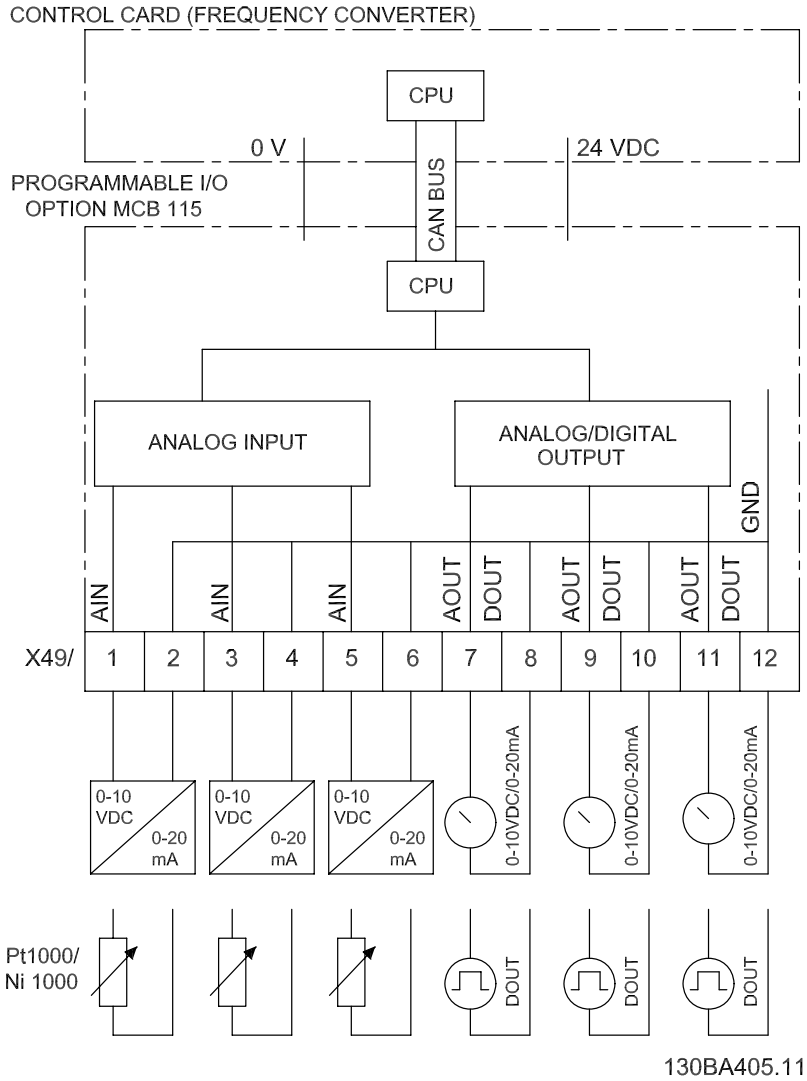

Terminals

There are 3 inputs and 3 outputs on the option. Inputs are named X49/1, X49/3 and X49/5. Outputs are named X49/7, X49/9 and X49/11.

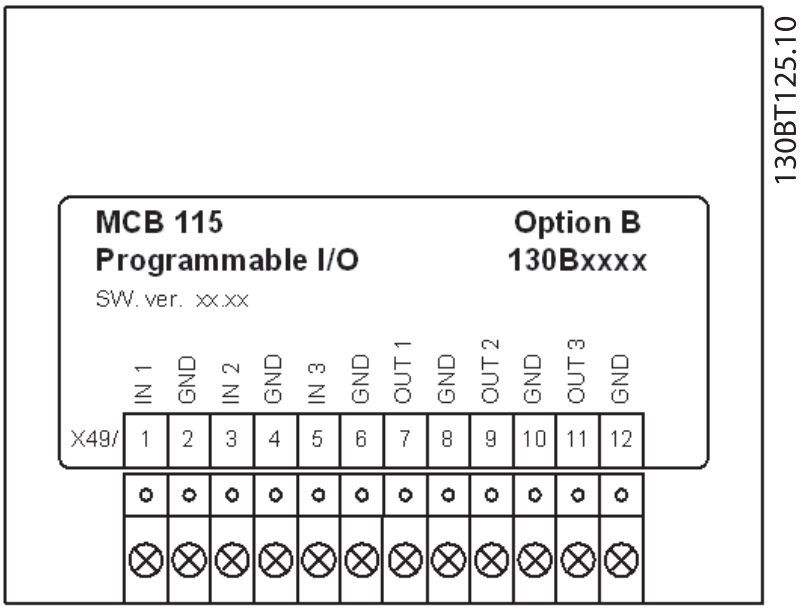

- Resolution for the analog voltage input is 10 bits.
- Accuracy for the analog voltage input is better than +/- 1%.
- The analog voltage input is continuously able to withstand +/- 28V DC.
- Impedance for the analog voltage input is equal to 10 kΩ.
- Sampling rate at inputs is 2 Hz as minimum.
- Resolution for the analog current input is 10 bits.
- Accuracy for the analog current input is better than +/- 1%.
- The analog current input is continuously able to withstand +/- 29mA DC.
- Impedance for the analog current input is 200 Ω
- PT1000 temperature sensor (1000 ohm at 0°C). Characteristic according to IEC60751.
- NI1000 temperature sensor (1000 ohm at 0°C). Characteristic according to DIN43760.
- Accuracy in temperature at -50°C is better than 1 Kelvin. Accuracy in temperature at +150°C is better than 2 Kelvin.
- Max cables length for temperature sensors, is 50 metres non-screened / non-twisted wires. Cable impedance should be kept low as every 3.85 Ω in cable will give a misreading of 1 Kelvin.

Ordering Code Numbers

Coated version code no: 130B1267

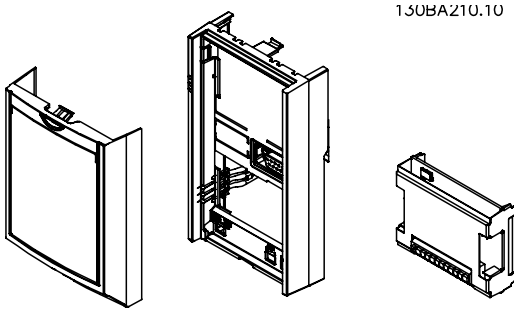

Mounting Guidelines

Mounting of Option Modules in Slot B

The power to the frequency converter must be disconnected.

⚠WARNING

Disconnect all electric power, including remote disconnects and discharge all motor start/run capacitors before servicing. Follow proper lock-out/tag-out procedures to ensure the power cannot be inadvertently energized. For frequency converters or other energy storing components provided by Trane or others, refer to the appropriate manufacturer's literature for allowable waiting periods for discharge of capacitors. Verify with an appropriate voltmeter that all capacitors are discharged. Failure to disconnect power and discharge capacitors before servicing could result in death or serious injury.

For A2, A3 and B3 enclosures:

- Remove the keypad, the terminal cover, and the keypad frame from the frequency converter.
- Fit the MCB115 option card into slot B.
- Connect the control cables and relieve the cable by the enclosed cable strips.
  Remove the knock out in the extended keypad frame delivered in the option set, so that the option will fit under the extended keypad frame.
- Fit the extended keypad frame and terminal cover.
- Fit the keypad or blind cover in the extended keypad frame.
- Connect power to the frequency converter.
- Set up the input/output functions in the corresponding parameters.

For A5, B1, B2, B4, C1, C2, C3, C4, D, E and F enclosures:

- Remove the keypad and the keypad cradle
- Fit the MCB115 option card into slot B
- Connect the control cables and relieve the cable by the enclosed cable strips
- Fit the cradle
- Fit the keypad

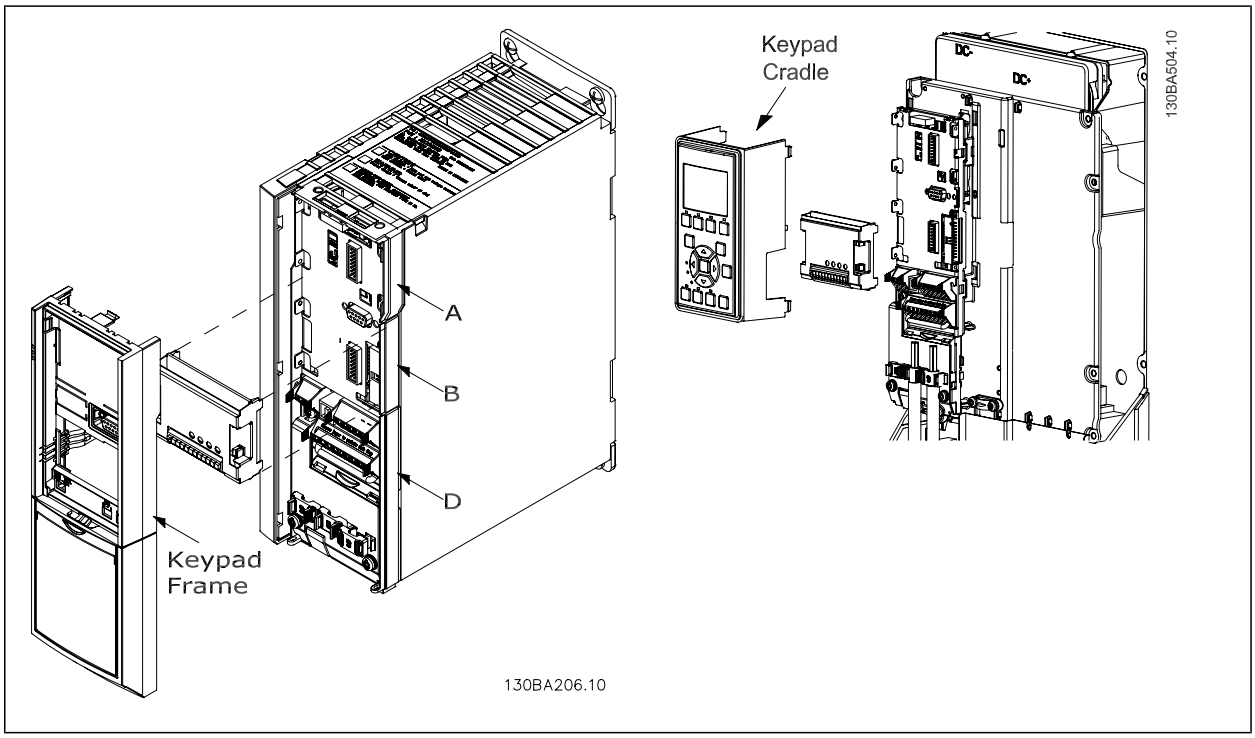

A2, A3 and B3 enclosures	A5, B1, B2, B4, C1, C2, C3, C4, D, E and F enclosures

Literature Order Number	BAS-SVX34A-EN
Date	May 2009
Supersedes	

www.trane.com

For more information, contact your local Trane office or e-mail us at comfort@trane.com

Trane has a policy of continous product and product data improvement and reserves the right to change design and specifications without notice.