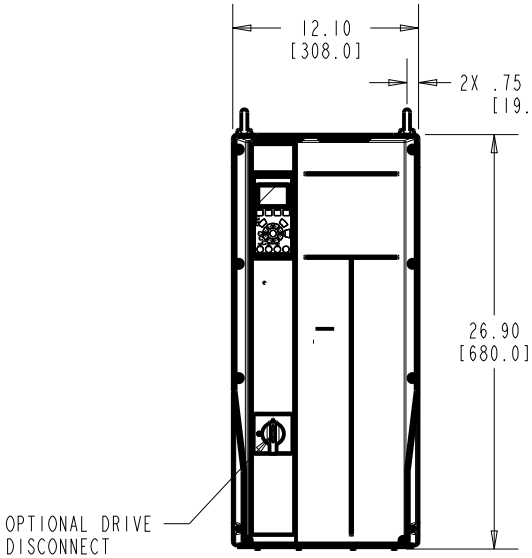

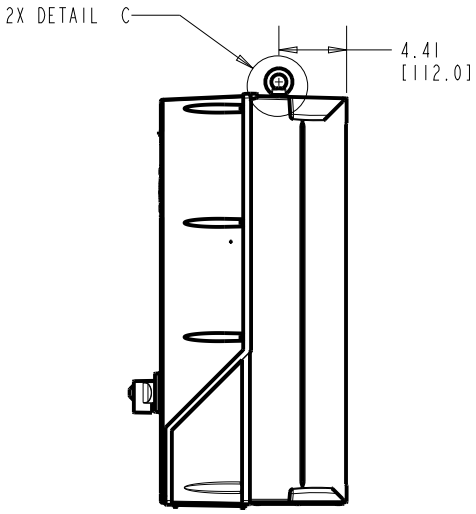

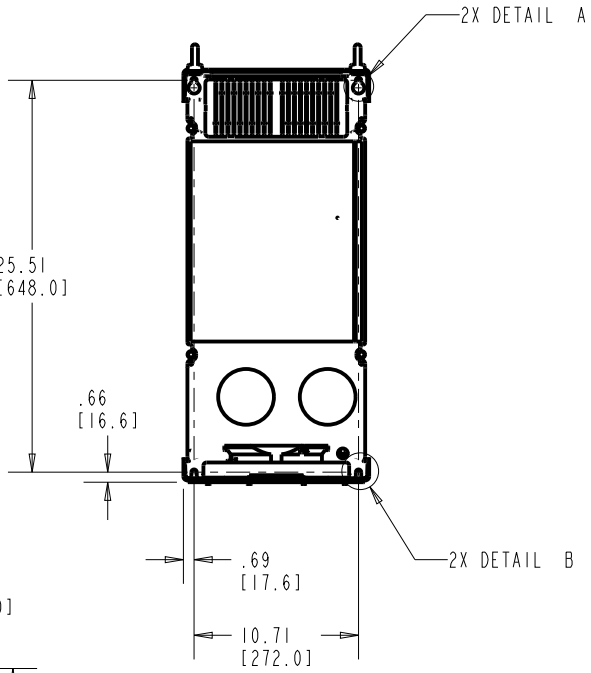

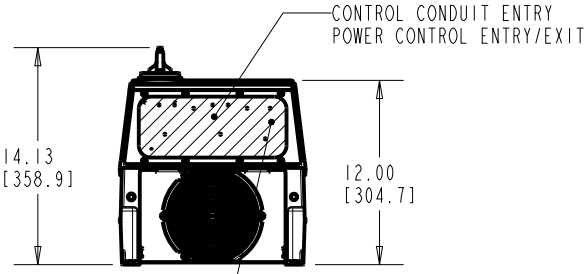

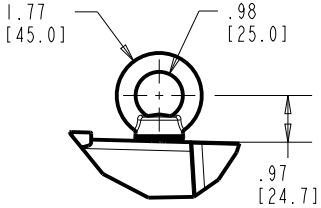

DETAIL C

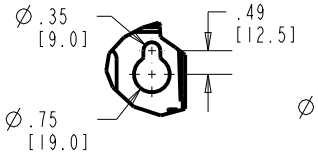

DETAIL A

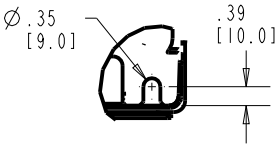

DETAIL B

FRAME SIZE C1		
VOLTAGE	HP	KW
208/230	25-40	18.5-30
460/600	50-75	37-55

CLEARANCE REQUIREMENT FOR FLOW COOLING:

THE UNIT MUST BE INSTALLED VERTICALLY WITH THE MINIMUM CLEARANCE OF 7.88in [200.0mm] ON THE TOP AND BOTTOM. ALL UL NEMA TYPE 1/IP21 AND NEMA TYPE 12/IP54 UNITS MAY BE MOUNTED SIDE BY SIDE WITH NO MINIMUM SIDE CLEARANCE.

WEIGHT: 100 lbs [45kg]

-NOTICE-
THIS DRAWING IS PROPRIETARY AND SHALL NOT BE COPIED OR ITS CONTENTS DISCLOSED TO OUTSIDE PARTIES WITHOUT THE WRITTEN CONSENT OF THE TRANE COMPANY

PRO-E ENTRY BY/DATE: MN 10/20/08	CHECKED BY/DATE:	THE TRANE COMPANY	
DESIGNED BY/DATE: MN 10/20/08	MFG. APPROVAL BY/DATE:		
APPROVAL:	ENG. APPROVAL BY/DATE:	TITLE: DWG,REF,SUBMITTAL,C1-TIER 1	
LATEST E.C.N. NO.: SP10100 / E.C.N. PRO-E ENTRY BY/DATE: SAK 09/01/10	PLOT SCALE: NONE	PRO-E FILE:	SHEET: 1 OF: 1 / DRAWING NO.: 174N3467 / REV.: A