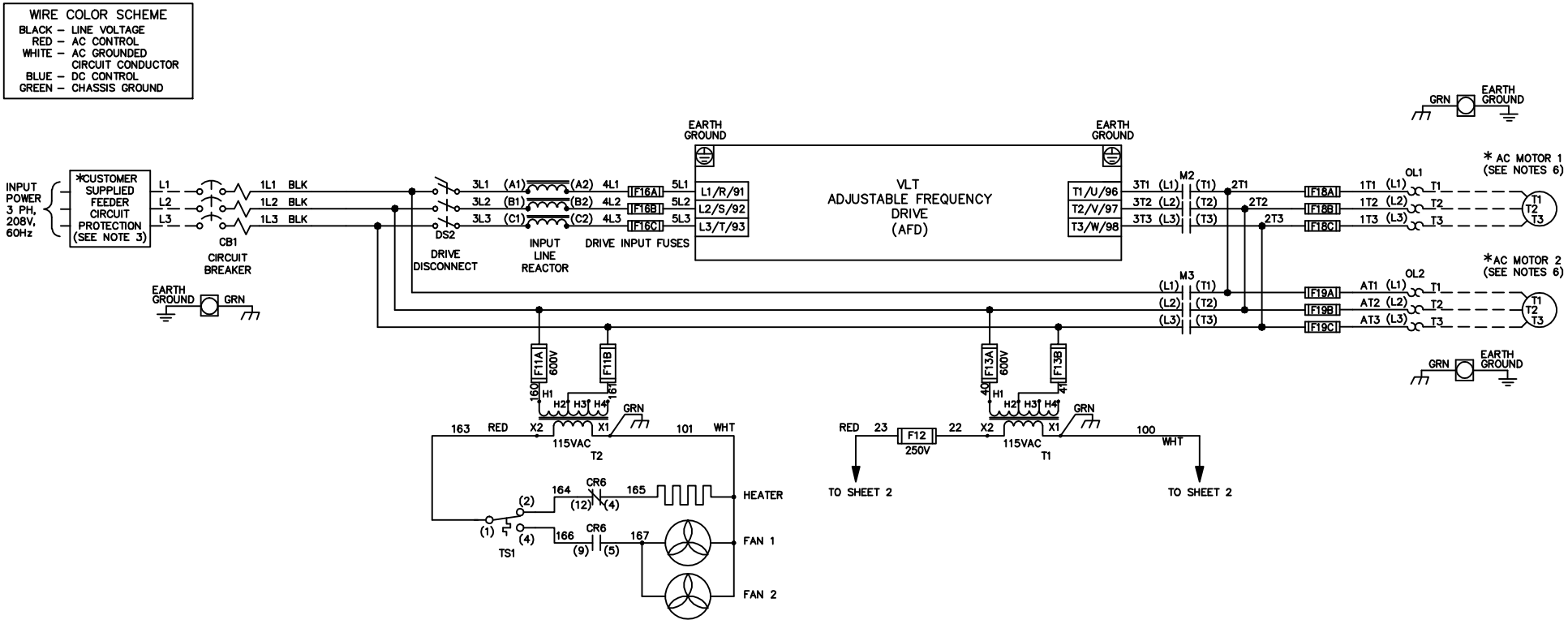

NOTES:
1. * INDICATES COMPONENTS NOT SUPPLIED BY MANUFACTURER.
2. REFER TO THE INSTALLATION AND OPERATION MANUAL FOR DRIVE FUNCTIONS AND PARAMETER SETTINGS.
3. FEEDER CIRCUIT PROTECTION, INPUT POWER AND MOTOR WIRING MUST BE SELECTED IN ACCORDANCE WITH THE N.E.C., ANY APPLICATION LOCAL CODES AND THE LOAD CURRENT RATING.
4. REPLACE JUMPER 'J1' WITH NORMALLY CLOSED SAFETY INTERLOCK CONTACT AS NECESSARY. CONTACT MUST BE RATED 1/4 HP @ 120VAC MINIMUM.
5. PANEL MAY REQUIRE DERATING, CONSULT DRIVE MANUAL OR FACTORY FOR FOLLOWING CONDITIONS:
   5.1. HIGHER SWITCHING FREQUENCY THEN DRIVE DEFAULT
   5.2. HIGHER THEN PANEL LISTED AMBIENT TEMPERATURES
   5.3. ELEVATION ABOVE 3300 FEET (1000 METERS)
   5.4. LONG MOTOR LEAD LENGTHS
6. WHEN MOTOR OVERLOADS SIZES ARE DIFFERENT, MOTOR 1 WILL BE THE LARGER OF THE TWO MOTORS

WARNING!
THE FOLLOWING TABLE LIST THE PARAMETERS THAT ARE SET DIFFERENT FROM THE DRIVE DEFAULT SETTINGS. ADDITIONAL PARAMETER SETTINGS MAY BE REQUIRED FOR YOUR APPLICATION.

DRIVE PARAMETER SETTINGS

PARAMETER #	NAME	SETTING	VALUE
0-02	MOTOR SPEED UNIT	1	HZ
0-03	REGIONAL SETTINGS	1	NORTH AMERICA
1-03	TORQUE CHAR.	1	VARIABLE TORQUE
5-02	TERMINAL 29 TYPE	1	OUTPUT
5-11	TERMINAL 19	52	RUN PERMISSIVE
5-31	TERMINAL 29	5	RUNNING
5-40[0]	RELAY 1	160	NO ALARM
5-40[1]	RELAY 2	167	START COMMAND
14-20	RESET MODE	13	INFINITE AUTO REST

B			–NOTICE– THIS DRAWING IS PROPRIETARY AND SHALL NOT BE COPIED OR ITS CONTENTS DISCLOSED TO OUTSIDE PARTIES WITHOUT THE WRITTEN CONSENT OF THE TRANE COMPANY	DRN DTM	NAME NEMA 3R,208V,2C ,MAIN CB & DRIVE DISC,DRIVE FUSE ,3MB,IR,DUAL MOTOR,2 FAN		THE TRANE COMPANY A DIVISION OF AMERICAN STANDARD INC.
A							
DR	ECNSP09001	1/09		APR DTM	MODEL VLT	PAGE 1 OF 2	SIZE A	DWG NO. 174N4508
REV	ECN	DATE					

WIRE COLOR SCHEME
BLACK – LINE VOLTAGE
RED – AC CONTROL
WHITE – AC GROUNDED CIRCUIT CONDUCTOR
BLUE – DC CONTROL
GREEN – CHASSIS GROUND

TERMINAL IDENTIFCATION
[X] – DRIVE TREMINAL
(X) – CUSTOMER TERMINAL

CONTACT SEQUENCE CHART FOR S1
X INDICATES CONTACT CLOSED

CONTACT \ POSITION	DRIVE	OFF	BYPASS
13–14			X
23–24	X		

CUSTOMER DRY CONTACT RATINGS

RELAY	CONTACT RATING
CR1, CR2, CR6, CR8, CR9	5A @ 120VAC 1/10 HP @ 120VAC
M2, M3	10A @ 120/240VAC
UV	8A @ 120VAC 1/3 HP @ 120VAC
TD1	4A @ 250VAC
DRIVE REALY 1 & 2	2A @ 240VAC

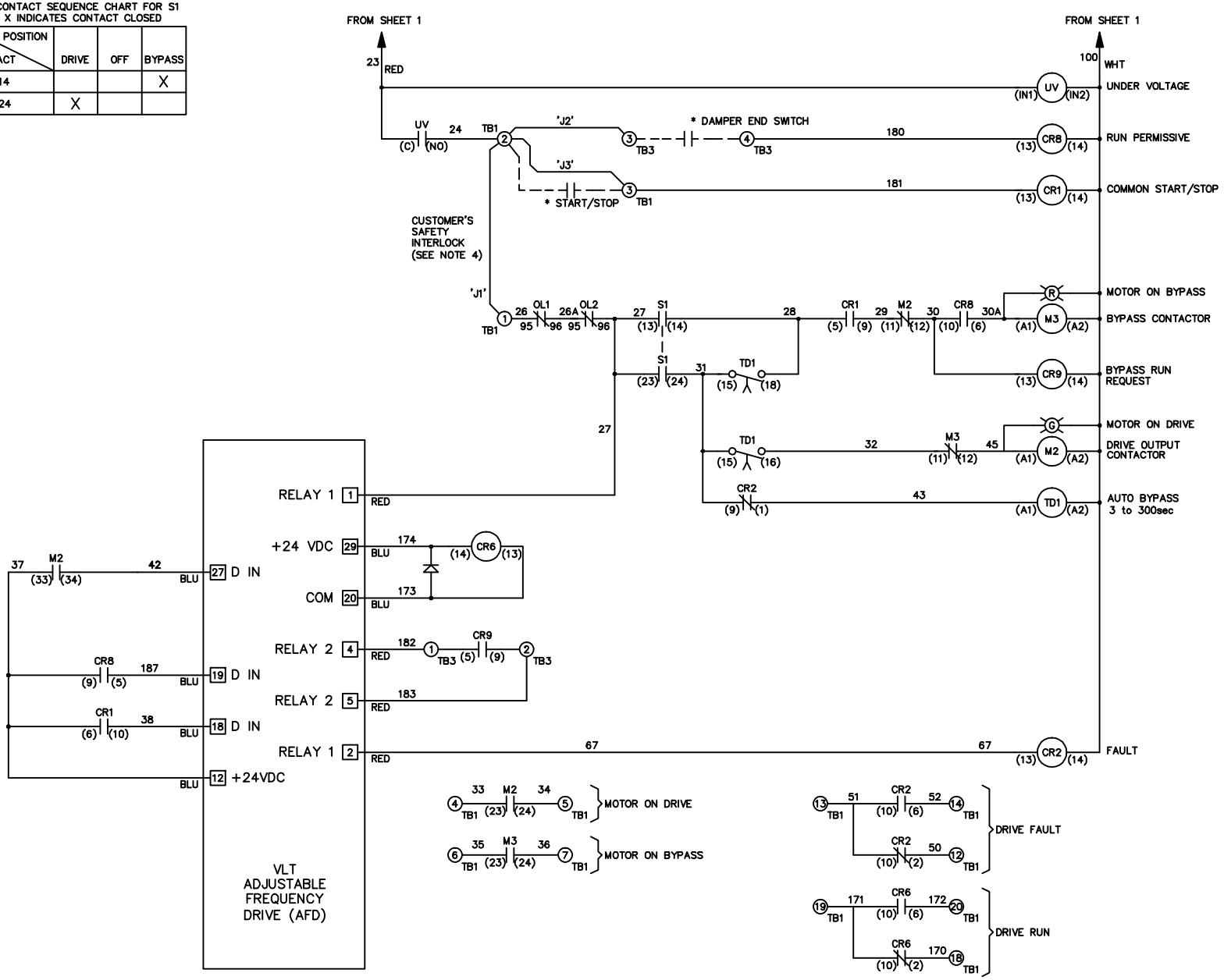

B			–NOTICE– THIS DRAWING IS PROPRIETARY AND SHALL NOT BE COPIED OR ITS CONTENTS DISCLOSED TO OUTSIDE PARTIES WITHOUT THE WRITTEN CONSENT OF THE TRANE COMPANY	DRN DTM	NAME NEMA 3R,208V,2C ,MAIN CB & DRIVE DISC,DRIVE FUSE ,3MB,IR,DUAL MOTOR,2 FAN		THE TRANE COMPANY A DIVISION OF AMERICAN STANDARD INC.
A				APR DTM	MODEL VLT	PAGE 2 OF 2	SIZE A	DWG NO. 174N4508
DR	ECNSP09001	1/09					
REV	ECN	DATE					